UNIMIG RAZOR



TIG330 AC/DC WATER COOLER

U11022 | Operating Manual

Contents

1. Safety **3**
2. Package Contents **7**
3. Technical Specifications **8**
3.1 Machine Specifications 8
3.2 Equipment Identification 8
4. Water Cooler Layout **9**
5. Welding Coolant **10**
5.1 Recommended Coolant 10
6. Installation **11**
6.1 Installing the Machine on the Water Cooler 11
6.2 Connecting the Water Cooled TIG Torch 14
6.3 Filling the Water Cooler 15
7. Operation **17**
7.1 Preparing for Operation 17
7.2 Operating the Water Cooler 17
7.3 Changing the Coolant 18
8. Maintenance **19**
9. Troubleshooting **20**
9.1 Machine Troubleshooting 20
9.2 Indicator Lights 20
9.3 Error Codes 21

1. Safety

Welding equipment can be dangerous to both the operator and people in or near the surrounding working area if the equipment is not correctly operated. Equipment must only be used under the strict and comprehensive observance of all relevant safety regulations.

Read and understand this instruction manual carefully for all system components, especially the safety instructions and warning notices before the installation and operation of this equipment.

Product specifications and features are subject to change without notice. While every effort has been made to provide accurate and current information at the time of publication, this manual is intended as a general guide and is not exhaustive regarding safety, welding, or the operation and maintenance of this unit. Due to the many variables in the welding field and the evolving nature of both the field and the UNIMIG product line, Welding Guns of Australia Pty Ltd. does not guarantee the accuracy, completeness, authority, or authenticity of the information in this manual or provided by any UNIMIG employee during conversations or business dealings. The product owner assumes all liability for its use and maintenance. Welding Guns of Australia Pty Ltd. does not warrant this product or this document for fitness for any particular purpose, performance, accuracy, or suitability of application. Furthermore, Welding Guns of Australia Pty Ltd. accepts no liability for injury or damages, whether consequential or incidental, resulting from the use of this product or from the content of this document, nor does it accept third-party claims of such liability.

Note:

- Observe the accident prevention regulations and any regional regulations.
- Safety and warning labels on the machine indicate any possible risks.
- Keep these labels clean and legible at all times.
- Technical changes due to further development in machine technology may lead to different welding behaviour.

Items in the manual that require particular attention in order to minimise damage and harm are indicated with the below symbols. Read these sections carefully and follow their instructions.

Note: Gives the user a useful piece of information.

Caution: Describes a situation that may result in damage to the equipment or system.

Warning: Describes a potentially dangerous situation. If not avoided, it will result in personal damage or fatal injury.

Machine Operating Safety

- Do not switch the function modes while the machine is operating. Switching of the function modes during welding can damage the machine. Damage caused in this manner will not be covered under warranty.
- Disconnect the electrode holder cable from the machine before switching on the machine to avoid arcing should the electrode be in contact with the workpiece.
- Only qualified persons should install, operate, maintain, and repair this equipment.
- During operation, keep everyone, especially children, away.



Electric Shock

Electric shock can kill. Touching live electrical parts can cause fatal shocks or severe burns. The electrode and work circuit is electrically live whenever the output is on. The input power circuit and internal machine circuits are also live when power is on. Incorrectly installed or improperly grounded equipment is dangerous.

- Connect the primary input cable according to Australian and New Zealand standards and regulations.
- Avoid all contact with live electrical parts of the welding circuit, such as sockets, tungstens and electrodes with bare hands.
- The operator must wear dry, hole-free welding gloves and body protection while they perform the welding task.
- The operator should keep the workpiece insulated from themselves.
- Keep cords dry, free of oil and grease, and protected from hot metal and sparks.
- Frequently inspect input power cable for wear and tear, and replace the cable immediately if damaged. Bare wiring is dangerous and can kill.
- Do not use damaged, undersized, or badly joined cables.
- Do not weld in the rain or in wet, moist, or damp areas.
- Do not drape cables over your body.
- Disconnect power source before servicing or maintaining this equipment.
- We recommend an RCD safety switch is used with this equipment to detect any leakage of current to earth.

DC voltage remains in the inverter power source after the removal of input power.



Arc Rays

Arc rays are harmful to your eyes and skin. Arc rays from the welding process produce intense visible and invisible ultraviolet and infrared rays that can burn eyes and skin.

- Always wear an approved welding helmet with the correct shade of filter lens and suitable protective clothing, including welding gloves, while the welding operation is performed.

Recommended filter shades for arc welding

Less than 150A	Shade 10*
150A to 250A	Shade 11*
250A to 300A	Shade 12
300A to 350A	Shade 13
Over 350A	Shade 14

**Use one shade darker for aluminium.*

- Wear safety glasses under your helmet.
- Measures should be taken to protect people in or near the surrounding working area. Use protective screens or barriers to protect others from flash, glare and sparks; warn others not to watch the arc.
- Wear proper PPE and body protection made from durable, flame-resistant materials like leather.

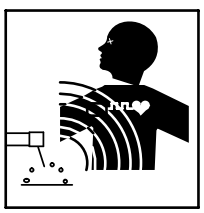

Electro Magnetic Fields (EMF)

Magnetic fields can affect Implanted Medical Devices.

- Wearers of Pacemakers and other Implanted Medical Devices should keep away.
- Implanted Medical Device wearers should consult their doctor and the device manufacturer before going near any arc welding.



Fire Hazard

Welding on closed containers, such as tanks, drums, or pipes, can cause them to explode. Flying sparks from the welding arc, hot workpiece, and hot equipment can cause fires and burns. Accidental contact of the electrode with metal objects can cause sparks, explosions, overheating, or fire. Check and be sure the area is safe before doing any welding.

- Remove any flammable materials well away from the working area. Cover flammable materials and containers with approved covers if they cannot be moved from the area.
- Do not weld on closed containers or containers that have held combustible materials, such as tanks, drums, or pipes, unless they are correctly prepared according to the required Safety Standards to ensure that flammable or toxic vapours and substances are totally removed, these can cause an explosion even though the vessel has been “cleaned”.
- Vent hollow castings or containers before welding. They may explode.
- Do not weld where the atmosphere may contain flammable dust, gas, or liquid vapours (such as petrol).
- Have a fire extinguisher nearby and know how to use it.
- Be alert that welding sparks and hot materials from welding can easily go through small cracks and openings to adjacent areas.
- Be aware that welding on a ceiling, floor, bulkhead, or partition can cause a fire on the hidden side.
- Avoid welding on tire rims or wheels, as heating can cause tires to explode and repaired rims may fail.
- Attach the earth clamp as close as possible to the welding area to minimise the risk of electric shock, sparks, and fire hazards caused by the welding current travelling through long or unknown paths.
- When not in use, ensure the MMA electrode is removed from its holder.
- Before welding, remove any combustible items, like butane lighters or matches, from your person.
- Post welding, thoroughly inspect the area to ensure there are no lingering sparks, glowing embers, or flames.
- Always use the correct fuses or circuit breakers, and don’t oversize or bypass them.
- Wear proper PPE and body protection made from durable, flame-resistant materials like leather.
- Read and understand the Safety Data Sheets (SDSs) and the manufacturer’s instructions for adhesives, coatings, cleaners, consumables, coolants, degreasers, fluxes, and metals.



Hot Parts

Hot parts can burn. Items being welded can generate and hold high heat and can cause severe burns.

- Do not touch hot parts with bare hands.
- Allow a cooling period before working on the welding equipment.
- Use the proper tools and insulated welding gloves and clothing to handle hot parts and prevent burns.



Noise Hazards

The noise from some processes or equipment can damage hearing.

- Wear approved ear protection if the noise level is high.

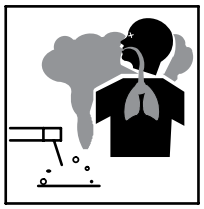

Fumes & Gases

Fumes and gases are dangerous. Welding produces fumes and gases and breathing these fumes and gases can be hazardous to your health.

- Do not breathe the smoke and gas generated while welding. Keep your head out of the fumes.
- Keep the working area well-ventilated and use fume extraction or ventilation to remove welding fumes and gases.
- In confined or heavy fume environments, always wear an approved air-supplied respirator.
- Welding fumes and gases can displace air and lower the oxygen level, causing injury or death. Be sure the breathing air is safe.
- Do not weld in locations near degreasing, cleaning, or spraying operations. The heat and rays of the arc can react with vapours to form highly toxic and irritating gases.
- Materials such as galvanised, lead, or cadmium-plated steel contain elements that can give off toxic fumes when welded. Do not weld these materials unless the coating is removed, or the area is very well-ventilated and/or you are wearing an air-supplied respirator.
- Read and understand the Safety Data Sheets (SDSs) and the manufacturer's instructions for adhesives, coatings, cleaners, consumables, coolants, degreasers, fluxes, and metals.



Cooler & Coolant

Some coolants can be flammable or poisonous. If poisoning occurs, contact a doctor or Poisons Information Centre. In Australia: Phone 13 11 26.

- For eye contact, immediately flush eyes with water for 15 minutes. If swallowed, do not induce vomiting. Give a glass of water. For skin contact, wash with soap and water.
- Only the manufacturer's original coolant is suitable for use with the water cooler due to its properties (electrical conductibility, anti-freeze agent, material compatibility, flammability, etc.).
- Only use suitable original coolant from the manufacturer.
- Do not mix the manufacturer's original coolant with other coolants.
- Only connect the suitable machine(s) to the water cooler unit.
- The manufacturer accepts no liability for damage resulting from the use of other machines that are not suitable or a different coolant. In addition, all warranty claims will be forfeited.
- Transport the coolant only in its original, sealed container and keep well away from any sources of ignition.
- Used coolant must be disposed of properly in accordance with the relevant national and international regulations. The coolant safety data sheet may be downloaded from the manufacturer's website.
- Check the coolant level before starting to weld, while the system is still cool.

PLEASE NOTE that under no circumstances should any equipment or parts be altered or changed in any way from the standard specification without written permission given by UNIMIG.

To do so will void the warranty.

2. Package Contents

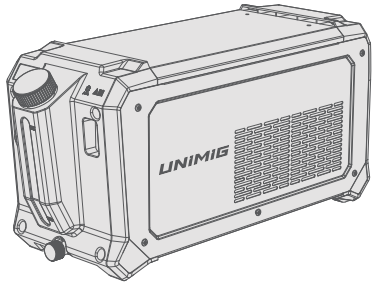

RAZOR TIG 330 AC/DC Water Cooler

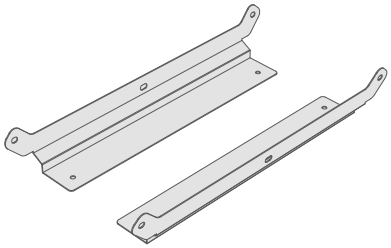

Mounting Brackets

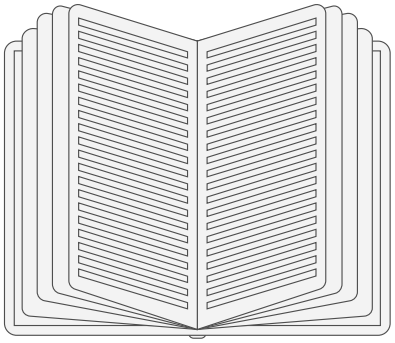

Manual

3. Technical Specifications

3.1 Machine Specifications

Technical Data

Parameter	Values
SKU	U11022
Protection Class	IP23S
Water Tank Volume (L)	6.5
Maximum Pressure (MPa)	0.48
Maximum Flow (L/min)	5
Rated Cooling Power (KW)	1.5 (1L/min)
Coolant	Industrial pure water, anti-freezing solution
Operating Ambient Temperature	Industrial pure water: 7 - 60° Anti-freezing solution: -20 - 60°
Storage Temperature Range	-20 - 60°
Noise (db)	<70
Standard	IEC 60974-2
Warranty (Years)	2

Size & Weight

Parameter	Values
Dimensions (mm)	600x217x283
Weight (kg)	14

3.2 Equipment Identification

Serial Number

The serial number of the device is marked below the data plate on the underside or backside of the machine. It is important to make correct reference to the serial number of the product when ordering spare parts or making repairs, for example.



4. Water Cooler Layout

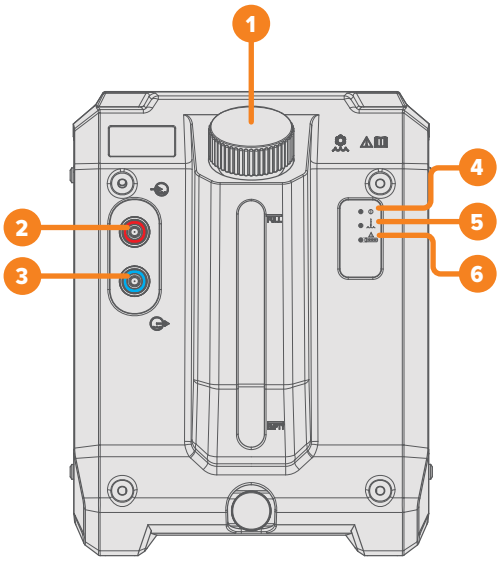

Front Panel Layout

1. Coolant Inlet
2. Coolant Flow Connection (Red)
3. Coolant Flow Connection (Blue)
4. Power Indicator Light
5. Over-temperature Alarm Indicator Light
6. Water Flow Alarm Indicator Light

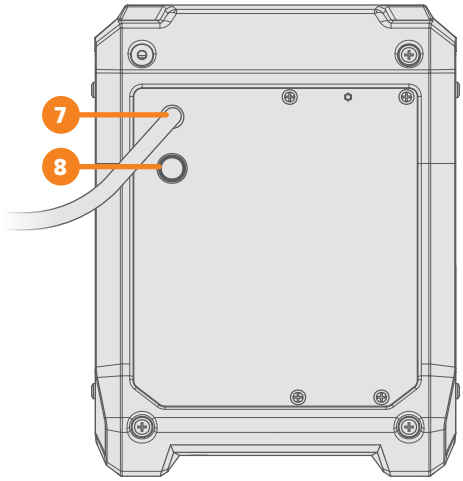

Back Panel Layout

7. Power Cable
8. Fuse

5. Welding Coolant

⚠ **Using the wrong coolant can cause serious damage to the water cooler. Do not mix different coolants.**

5.1 Recommended Coolant

The water cooler is supplied without coolant.

Please fill the water cooler exclusively with original UNIMIG coolant. The use of other coolants is not advised due to concerns regarding electrical conductivity and material compatibility.

6. Installation

Don't connect the equipment to the wall socket/mains supply before the installation is complete.

Don't modify the equipment in any way except for the changes and adjustments covered in the manufacturer's instructions.

Place the machine on a horizontal, stable and clean ground. Check that there is enough space for cooling air circulation in the machine's vicinity. Don't cover the machine's ventilation as it could overheat.

This water cooler should only be used with UNIMIG machines and strictly for its designated purpose. Misuse or use beyond these guidelines is not permitted and any damage or errors resulting from such misuse will not be covered by the manufacturer.

Tools needed:

- **Phillips Head Screwdriver**

6.1 Installing the Machine on the Water Cooler

1. Attach the two mounting brackets to the top of the water cooler.

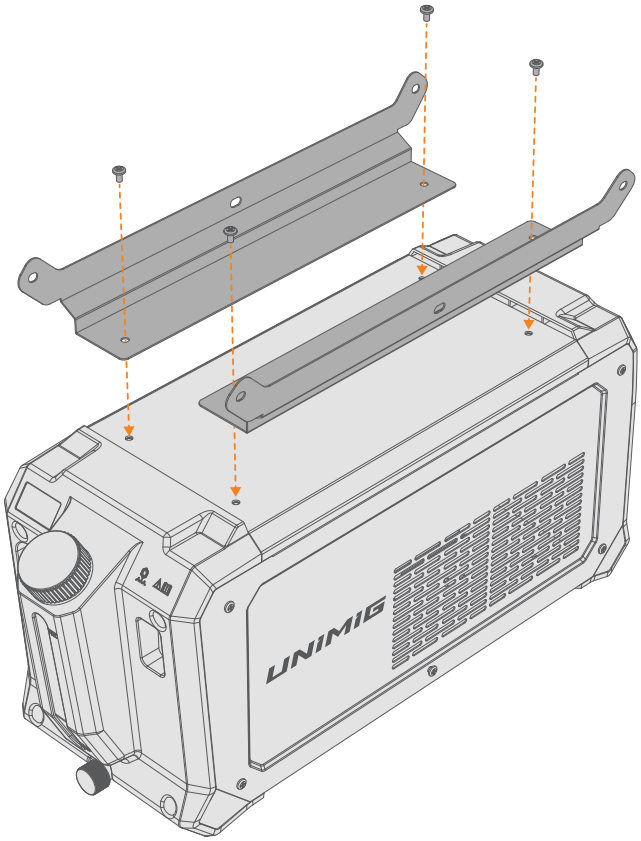

2. Unscrew the three screws at the bottom of the RAZOR TIG 330 AC/DC.

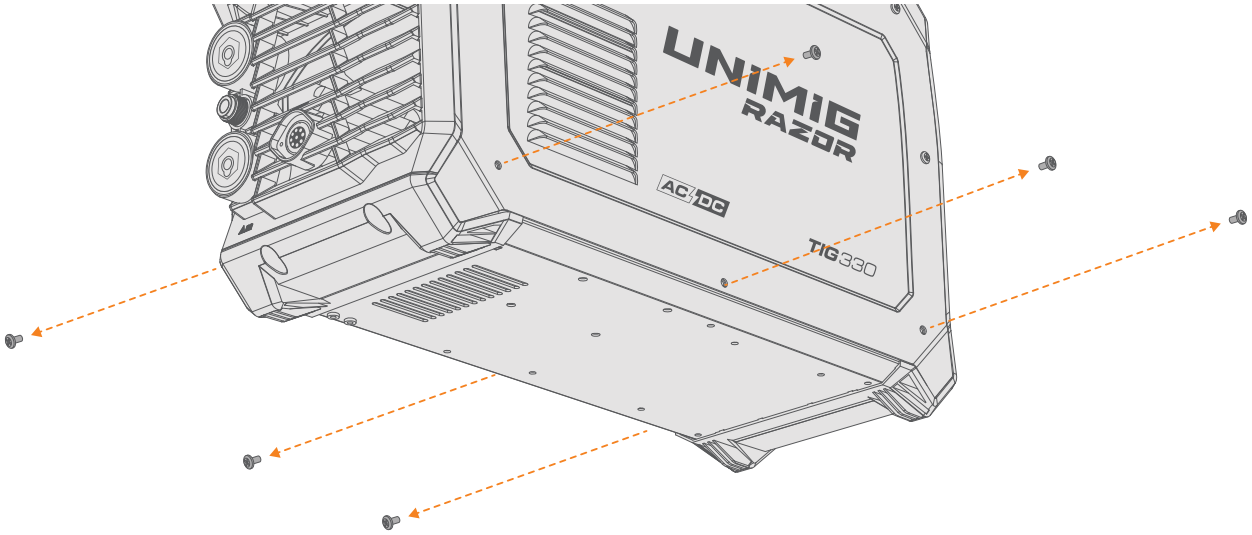

3. Place the machine on top of the water cooler and replace the screws via the mounting points.

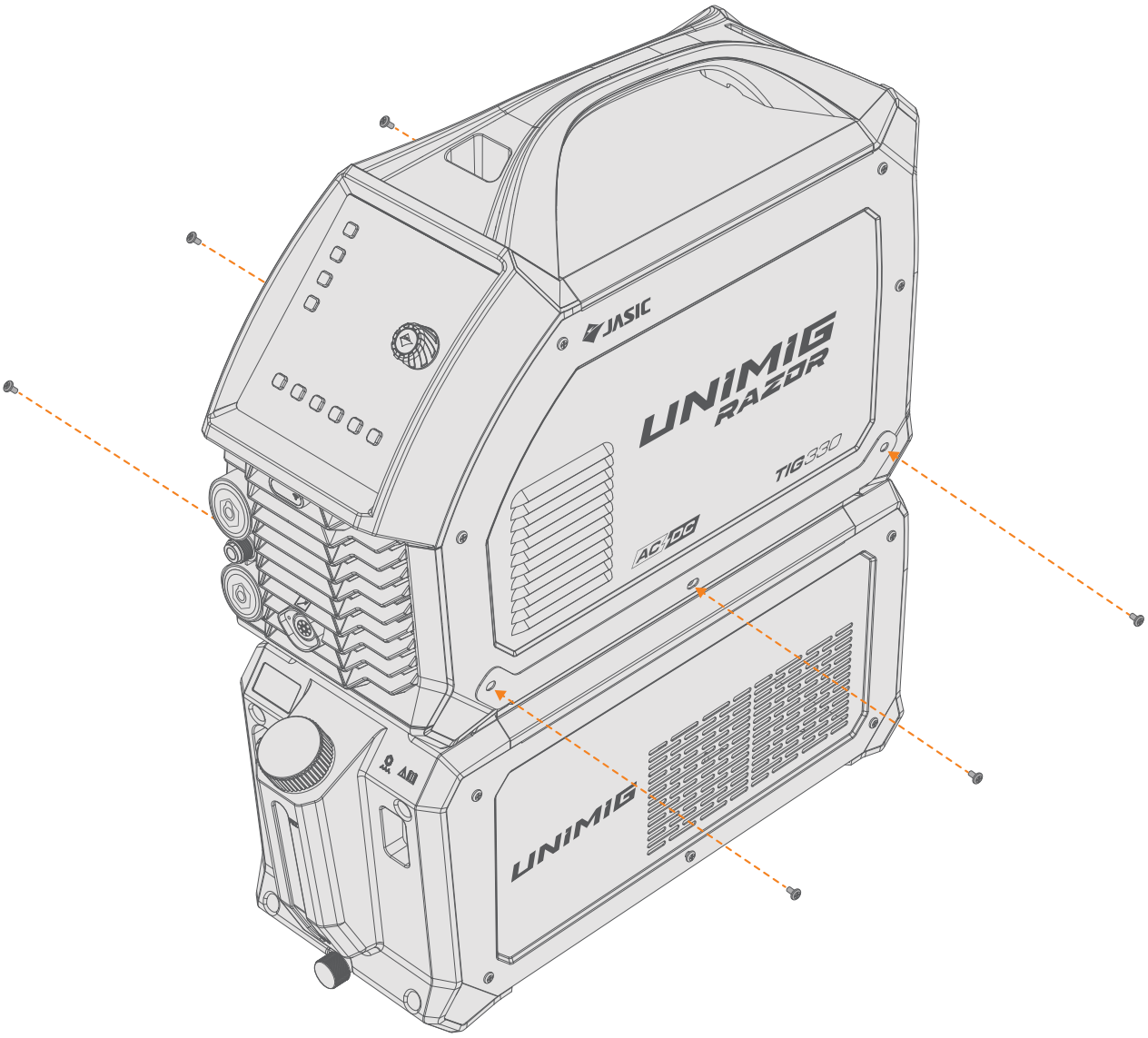

4. Plug the water cooler power cable into the back of the machine.

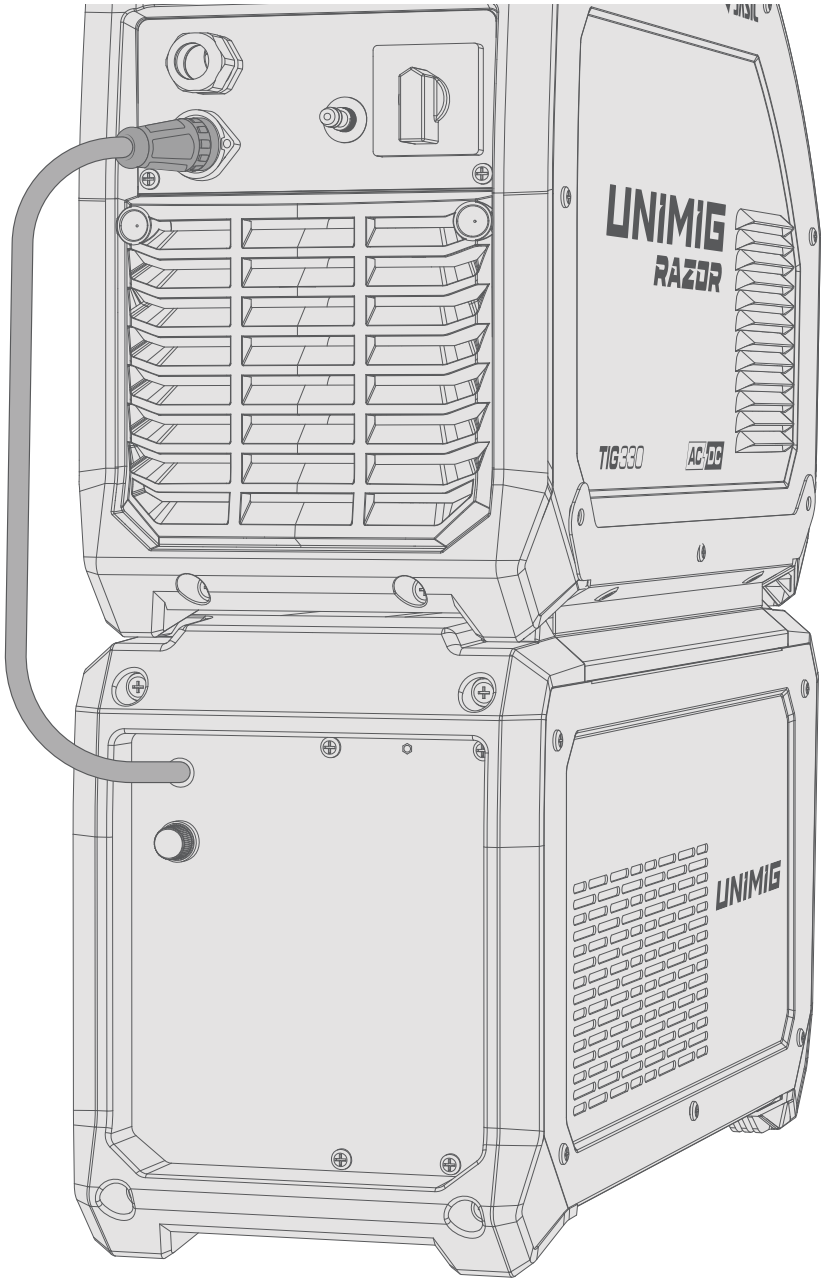

6.2 Connecting the Water Cooled TIG Torch

1. Assemble the TIG torch.
2. Connect the TIG torch to the negative (-) dinse connection, and twist to lock it in place.
3. Plug the red coolant return cable into the red output connection and the blue coolant supply cable into the blue input connection on the water cooler unit.
4. Plug the torch connector into the pin socket.
5. Plug the gas connector into the gas outlet.

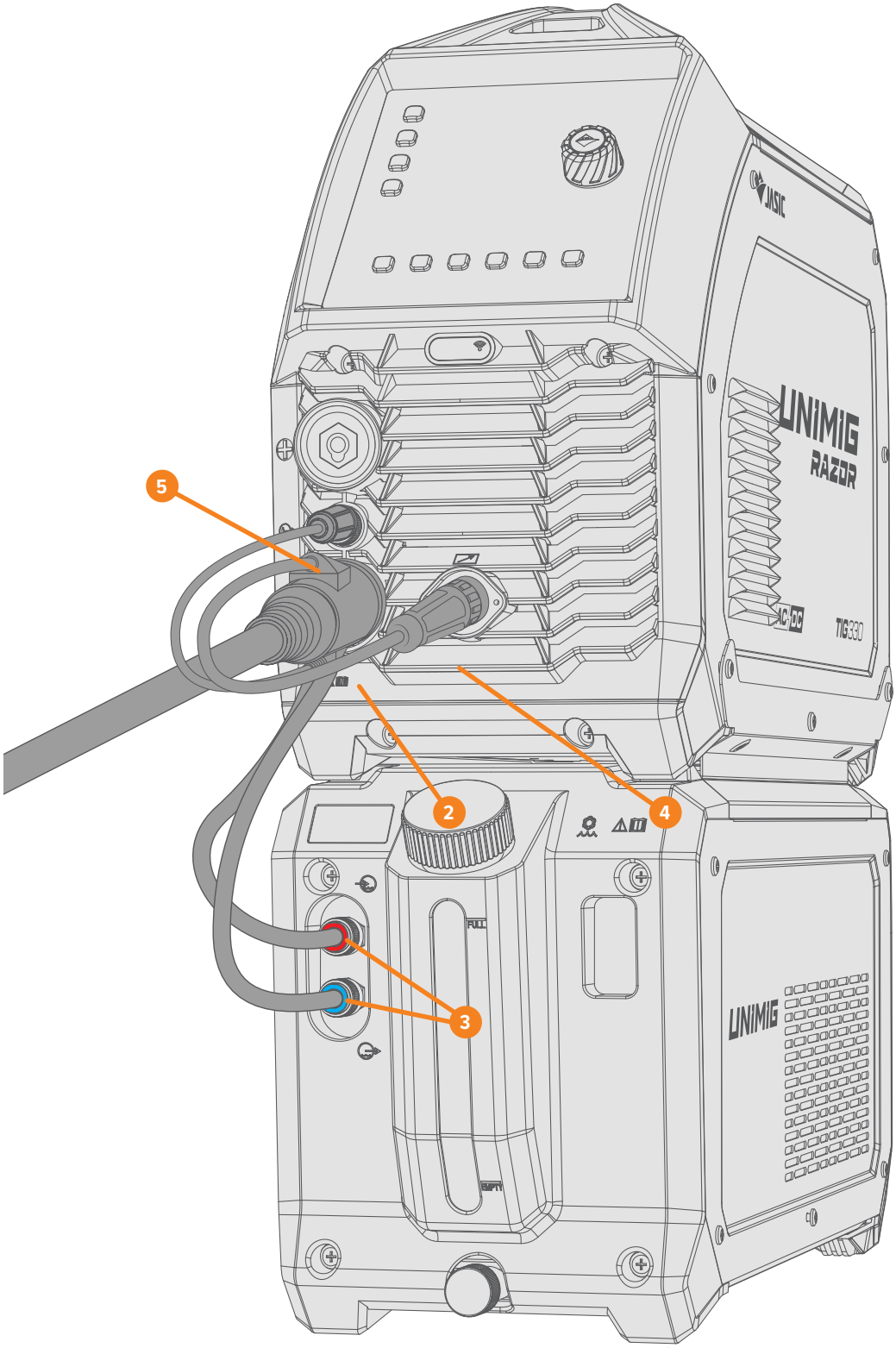

6.3 Filling the Water Cooler

Use the coolant pump exclusively with UNIMIG's original coolant. Running the pump dry, even briefly, can result in damage.

Be careful not to spill any coolant and watch for leaks. Remove any coolant from the exterior of the water cooler and make sure no coolant gets inside. This can damage the internal components.

1. Open the water cooler cap.

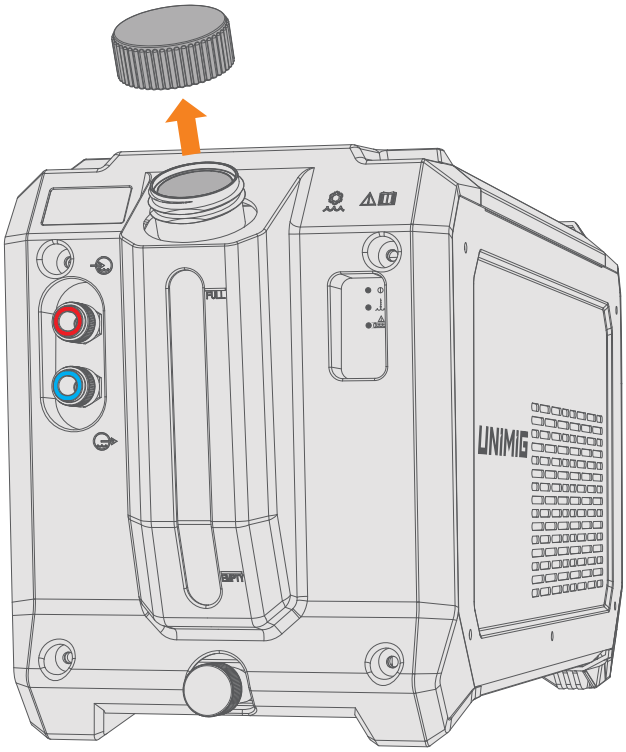

2. Fill the water cooler with coolant. Do not fill over the 'Max' line.

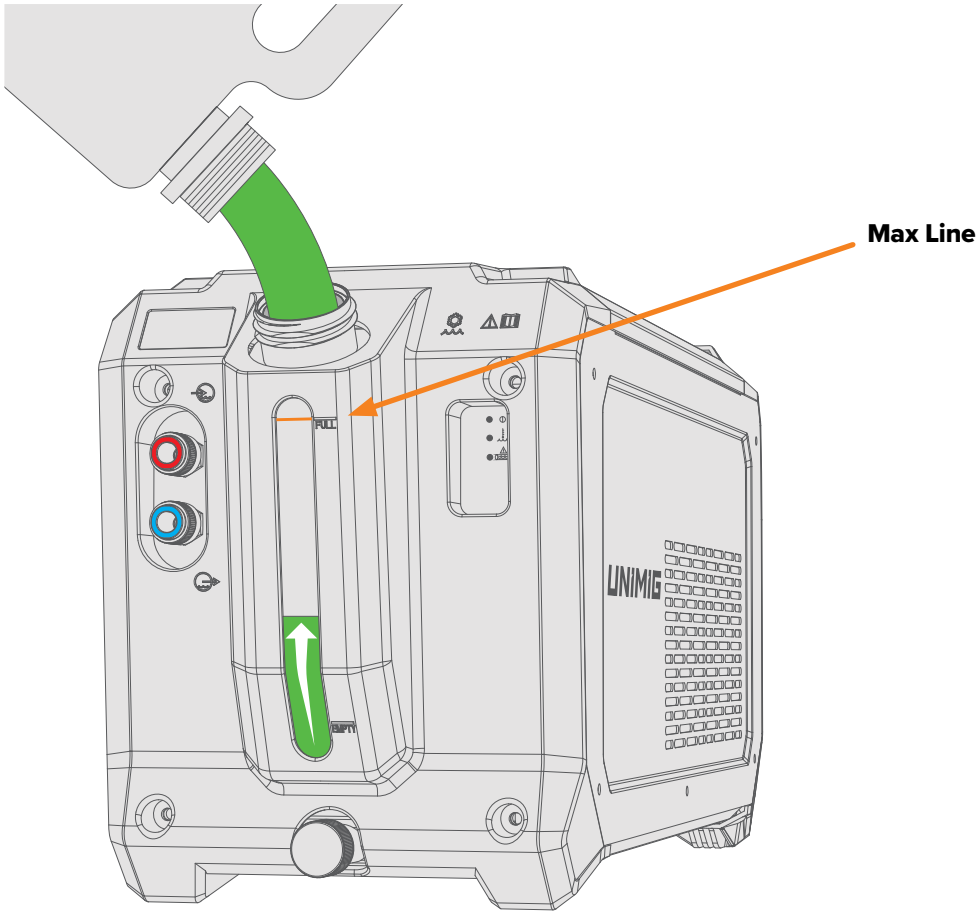

3. Close the water cooler cap.

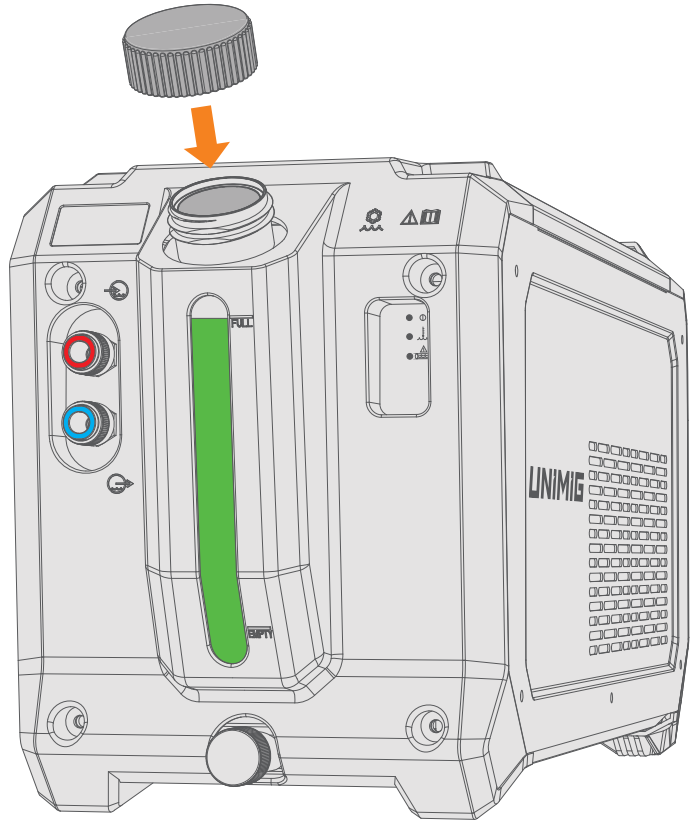

7. Operation

7.1 Preparing for Operation

Before using the equipment, ensure that all the necessary installation actions have been completed according to your equipment setup and instructions.

Connect the plug into the mains socket, then switch the machine ON.

7.2 Operating the Water Cooler

1. Ensure there is coolant in the tank and that the welding torch is connected.
2. **Press** the 'Water' button on the front of the machine to place the machine into water cooling mode.

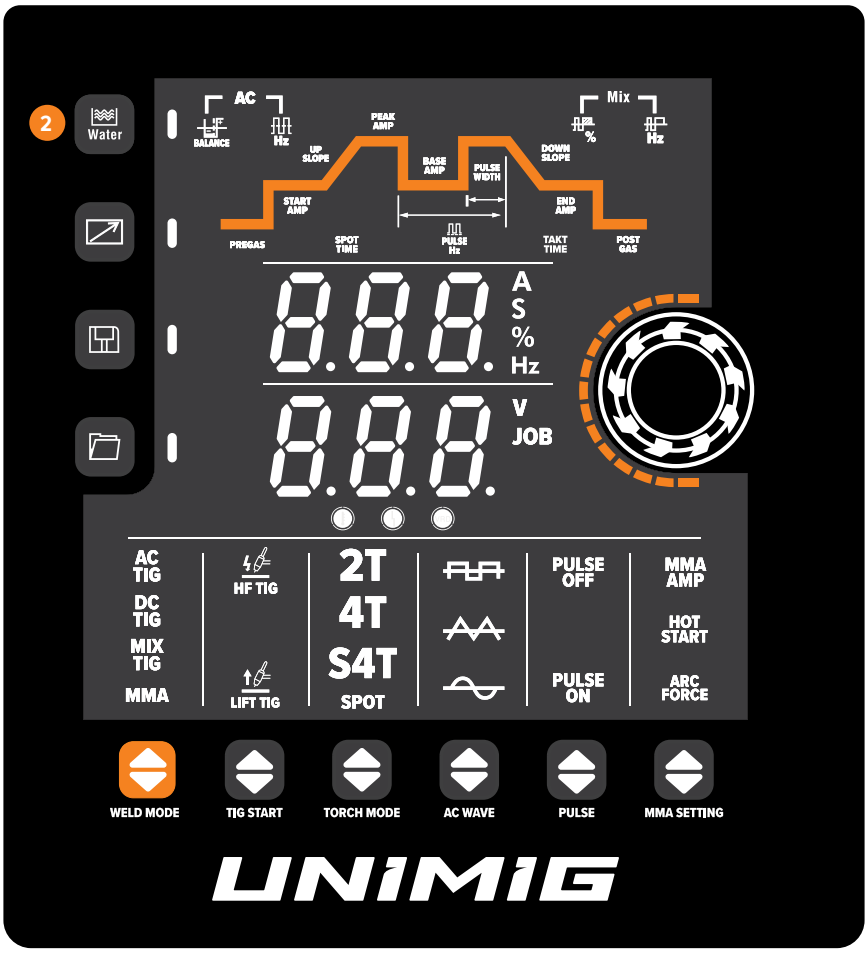

3. When the water cooler unit is first turned on, it will run for two minutes.
4. Once the welding is finished, the water cooler will continue to run for 5 minutes. Then it will shut off automatically, and enter an energy-saving standby mode.

If the system detects that there isn't enough coolant in the unit, it will display error code E71, and the machine will need to be restarted to remove this error.

7.3 Changing the Coolant

⚠ Disconnect the equipment from the wall socket/mains supply before changing the coolant.

1. Undo the drain plug cap and pour out the old coolant. Dispose of it safely.

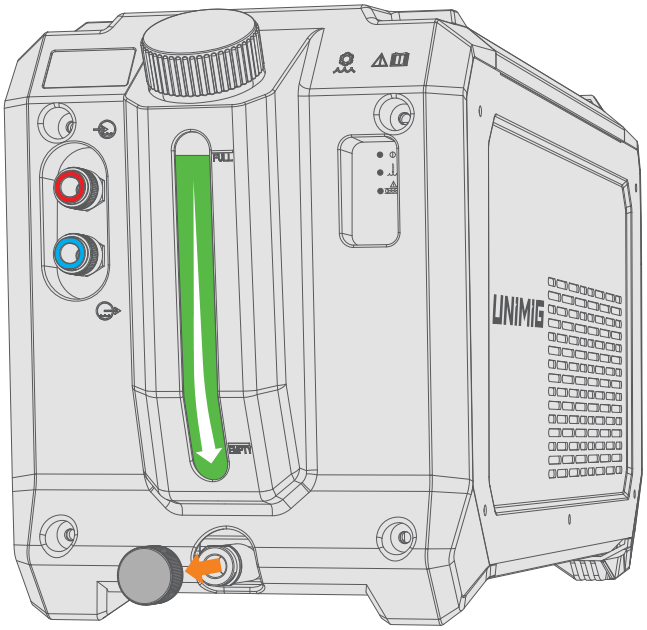

2. Pour in new coolant.

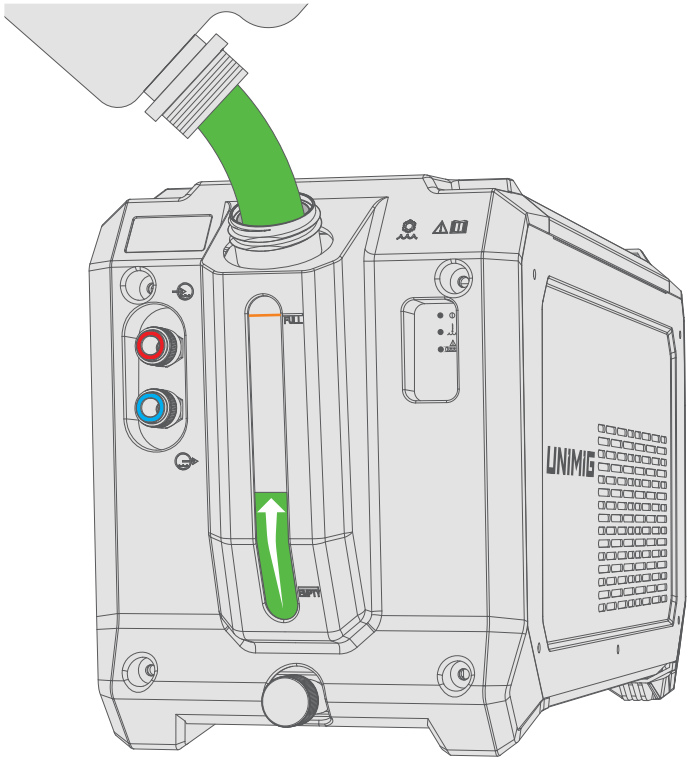

ⓘ It is recommended that the coolant tank be flushed before adding new coolant. To flush the tank, fill it with water and then empty it again. You can repeat this step until it runs clear. This will prevent contamination of the new coolant and extend the lifespan of the water cooler.

8. Maintenance

How often the cooler is used and the working environment it is in should both be considered when planning the frequency of maintenance. In severe conditions, maintenance should occur more frequently.

Proper operation of the cooler and regular preventive maintenance will help avoid equipment failure, increase the lifespan of the cooler and ensure problem-free welding.

⚠ **Turn the machine off and unplug it from the mains before beginning any maintenance.**

Before each use, check your gas hose, earth clamp and cable, and power cable are in good condition. Check that all connections are properly fastened. Any loose connections can inhibit welding performance and cause damage.

- Check that all covers and components are intact.
- Check all electrical cables and connections every 6 months.
- Clean any oxidised connections and tighten them.
- Check the coolant level regularly. If the coolant level is below the ‘Min’ mark, top it up with coolant.
- Check the purity of the coolant and change it when necessary.

⚠ **Only authorised electricians or service repair agents should carry out repairs and internal servicing.**

For repairs, contact UNIMIG at unimig.com.au or contact your local dealer.

9. Troubleshooting

The issues and potential reasons outlined are not exhaustive but indicate common scenarios that might arise with regular use of the machine.

9.1 Machine Troubleshooting

Problem	Recommended Actions
The water cooler doesn't turn on	• Check that the power line is correctly connected. • Check that the input cables are properly connected to the power supply. • Check that the main board patch cord isn't loose.
The flow warning light turns on	• Check that nothing is obstructing the fan. • Check that the main board patch cord isn't loose. • Check that the main board is outputting DC24V. If not, it may need to be replaced. • Check that the water pump is working properly at DC24V. If not, it may be damaged and need to be replaced. • Check that the internal lines aren't loose. • Check that the flow switch is functioning correctly. When water flows in the water pipe, the flow switch should be open. • Check the coolant for impurities. Impurities in the coolant can cause the flow switch to break down."
The over-temperature light turns on	• Check if the operating power is exceeding the cooling power. If the water temperature is too high, allow it to decrease before reusing the machine. • Check that the internal lines aren't loose. • Check the temperature switch is working. If the water temperature exceeds the maximum threshold of the temperature switch, it will close. If the water temperature falls below the minimum threshold, it will open.
Fan doesn't start	• Check that nothing is obstructing the fan. • Check that the main board patch cord isn't loose. • Check that the main board is outputting DC24V. If not, it may need to be replaced. • Check that the fan works properly at DC24V. If not, it may be damaged and need to be replaced.
The water cooler leaks	• Tighten any joints that are leaking. • Replace the condenser pipe if it has corroded. • Replace the water pump if it is leaking. • Replace the coolant tank if it is leaking. • Replace the pulsation damper if it is leaking.

9.2 Indicator Lights



The first indicator light is the power display. This light will be on when the welder is connected properly and powering the water cooler.



The second indicator light is an over-temperature alarm display. This light will be on if the coolant is overheating.



The third indicator light is the water flow error alarm display. This light will turn on when the cooler has insufficient water circulation.

9.3 Error Codes

Code	Name	Possible Reason	Potential Action
E71	Water cooler alarm	• The water cooler is not connected. • The water cooler unit does not have enough coolant. • The water cooler is overheating.	• Check the water cooler wiring and that it is connected to the machine properly. • Add more coolant. If there is coolant in the unit, check the water cooler wiring and the motor is running. • Wait for the water cooler to cool down. If the problem persists, contact UNIMIG customer service.

The error code will display on the machine's screen, not the water cooler.

UNIMIG

BUILT FOR WELDERS



100%
AUSTRALIAN
OWNED

unimig.com.au

@UNIMIG